D SERIES

AM16

PREMIUM DRIVE
FOC VECTOR CONTROL
FOR IM AND PM MOTORS

MOTOVARIO®
HEART OF MOTION
a TECO Group company

1 INTRODUCTION

The AM16 series is distributed on a wide power range from 0,75kW to 90kW with 3ph 400V power supply and made in 6 different mechanical sizes.

Size 1
0,75 - 1,5 - 2,2 kW

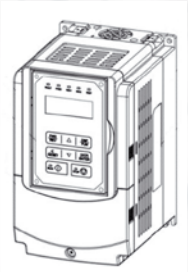

Size 2
4 - 5,5 kW

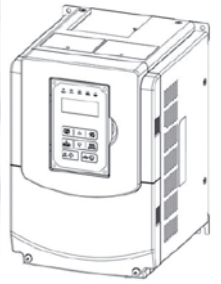

Size 3
7,5 - 11 kW

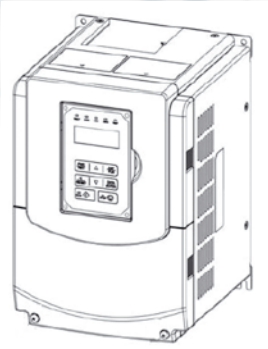

Size 4
15 - 18,5 - 22 kW

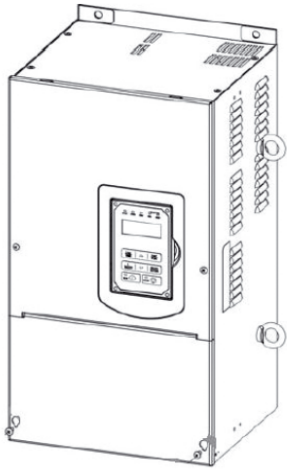

Size 5
30 - 37 - 45 - 55 kW

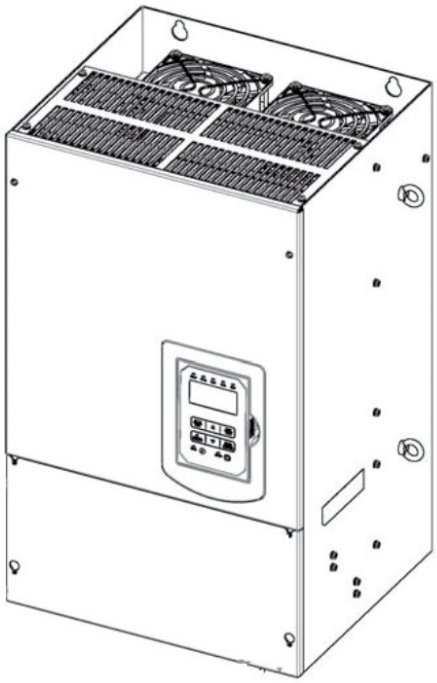

Size 6
75 - 90 kW

1 INTRODUCTION

The AM16 is characterised by a high performance vector control with impressed current for high dynamic applications and significant torque overloads up to 200% such as, cranes, elevators, drilling machines, presses, winders/unwinders, spinning machines.

- *Speed range: 1:1000*
- *Speed precision: ± 0,1%*
- *Starting torque at 0 Hz: 200%*

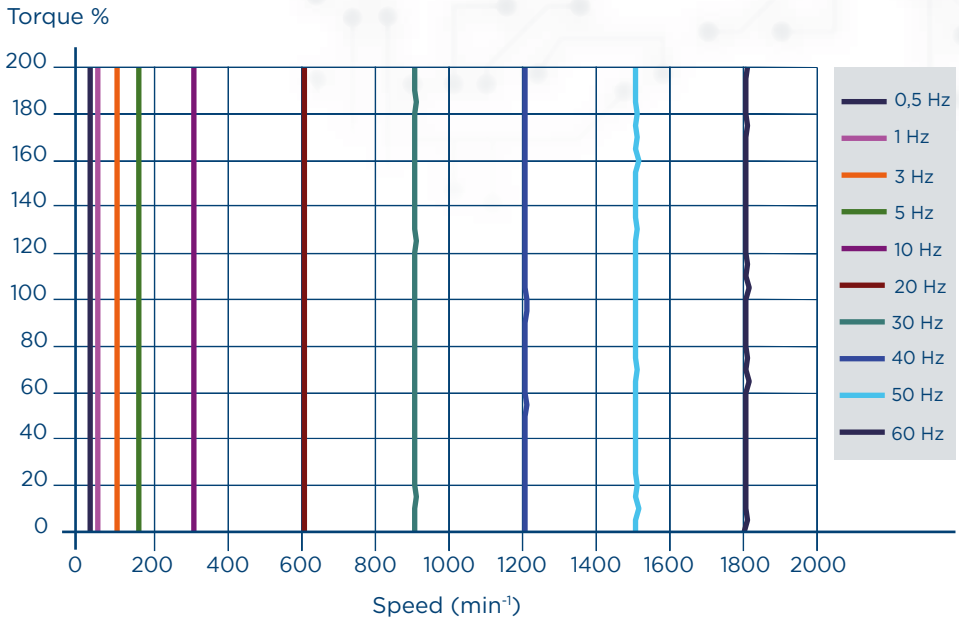

Thanks to the three-mode Auto-Tuning function, the user can significantly reduce commissioning times, maximising product performance.

1. Dynamic Auto-tuning

2. Static Auto-tuning

3. Stator resistance in line estimate

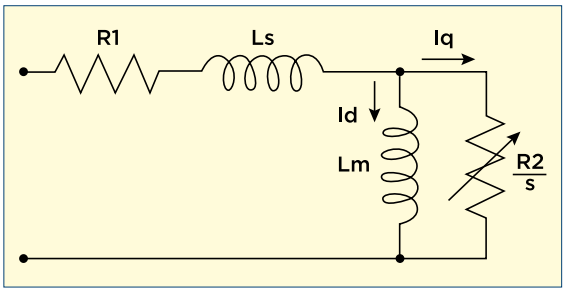

Motor equivalent circuit

1 INTRODUCTION

The AM16 series, featuring sophisticated speed and torque control algorithms, allows managing both asynchronous induction motors (IM) and permanent magnet synchronous motors (PM) with open-loop adjustment and in feedback mode with standstill torque.

IM Motor

PM Motor

With the four quadrant operation, during braking phase, the AM16 inverter is able to prevent the Overvoltage effect by redirecting the regenerative energy towards the motor, thus avoiding the use of the braking resistor.

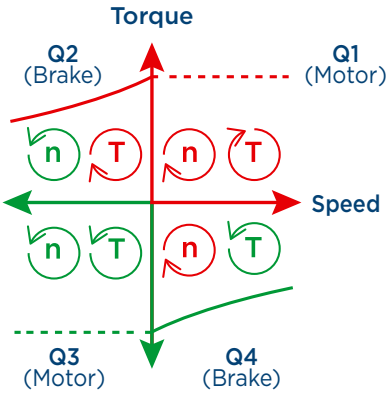

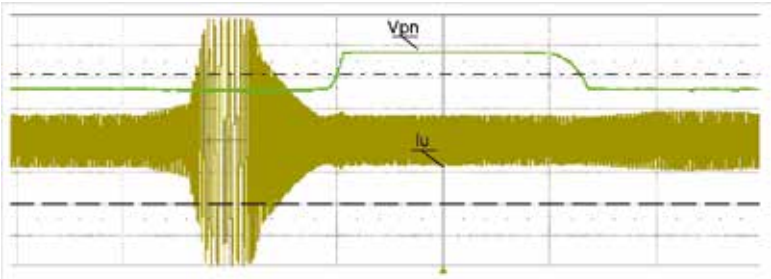

MOTOVARIO®
HEART OF MOTION
a TECO Group company

1 INTRODUCTION

To facilitate the user selection of the motor control mode most suitable for the application, the AM16 series provides for a series of Macro-applications to be selected through software parameter which set the inverter for the operation requested.

	Control type				
Application type	**V/f**	**V/f with feedback**	**SLV**	**SV with feedback**	**PMSV with feedback**
Fans	X				
Centrifugal pumps	X				
Mixers	X				
Conveyor belts	X	X	X		
Compressors	X	X	X		
Elevators			X	X	
Presses			X		
Dynamometers			X	X	
Extruders			X	X	
Injection moulding				X	
Rotating machines				X	X
Torque adjustment				X	X
Torque control				X	X
Position synchronisms				X	X
Positioners				X	X
Servo systems					X
Winders/Unwinders				X	

1 INTRODUCTION

Besides motor control functions, the AM16 series is also equipped with an integrated PLC programmable through Ladder language, complying with standard IEC 61131, which allows the inverter to independently manage the processes, also complex ones, which do not necessarily interact with the motor dynamics.

	Symbols						
Functions	**[**	**^**	**v**	**P**	┤├	┤/├	**NO / NC**
Inputs					I	i	I1~I8 / i1~i8
Outputs	Q	Q	Q	Q	Q	q	Q1~Q2 / q1~q2
Auxiliary controls	M	M	M	M	M	m	M1~MF / m1~mF
Special registers							V1~V7
Counting functions	C				C	c	C1~C8 / c1~c8
Timing functions	T				T	t	T1~T8 / t1~t8
Comparison functions	G				G	g	G1~G8 / g1~g8
Control functions	F				F	f	F1~F8 / f1~f8
Sum and subtraction functions	AS						AS1~4
Multiplication and division functions	MD						MD1~4

2 FIELDS OF APPLICATION

HIGH DYNAMIC APPLICATIONS

CRANES

BOTTLING SYSTEMS

WINDERS/UNWINDERS

OVERHEAD TRAVELLING CRANES

PUMPING SYSTEMS

INJECTION/EXTRUSION SYSTEMS

2 FIELDS OF APPLICATION

LOW DYNAMIC APPLICATIONS

FANS

AIR CONDITIONERS

PUMPS

SCREW CONVEYORS

3 DESIGNATION

The designation string defines the inverter identification rules for a correct selection of its main structural features.
It consists of an ordered sequence of alpha-numerical values according to what listed in the diagram below:

AM16 - 340 - 0075 - F - 20

Series	Power supply	Motor power	EMI filter	IP Rating
AM16	340	0075	-	00
		0150	F	20
		0220		
		0400		
		0550		
		0750		
		1100		
		1500		
		1850		
		2200		
		3000		
		3700		
		4500		
		5500		
		7500		
		9000		

340 = 3 ph 400V

00 = IP00 protection rating
20 = IP20 protection rating

- = without EMI filter
F = integrated EMI filter, class A, category C2

0075 = 0,75 kW
0150 = 1,5 kW
0220 = 2,2 kW
0400 = 4 kW
0550 = 5,5 kW
0750 = 7,5 kW
1100 = 11 kW
1500 = 15 kW
1850 = 18,5 kW
2200 = 22 kW
3000 = 30 kW
3700 = 37 kW
4500 = 45 kW
5500 = 55 kW
7500 = 75 kW
9000 = 90 kW

4 PRODUCT OFFER

Coherently with the previous designation structure, the AM16 series will be completely described in the following table:

Inverter	Power supply	Power (kW)	EMI filter	IP Rating
AM16-340-0075-F-20	3ph 400V	0,75	Integrated	20
AM16-340-0150-F-20		1,5		
AM16-340-0220-F-20		2,2		
AM16-340-0400-F-20		4		
AM16-340-0550-F-20		5,5		
AM16-340-0750-F-20		7,5		
AM16-340-1100-F-20		11		
AM16-340-1500-F-20		15		
AM16-340-1850-F-20		18,5		
AM16-340-2200-F-20		22		
AM16-340-3000-F-20		30		
AM16-340-3700-F-20		37		
AM16-340-4500-F-20		45		
AM16-340-5500-20		55	Optional	
AM16-340-7500-00		75		00
AM16-340-9000-00		90		

5 MAIN FUNCTIONS

- Closed-loop, V/f and sensorless vector control for induction motors (IM)
- Control for permanent magnet motors (PM)
- Motor Auto-tuning function
- 200% of the rated torque at 0Hz
- Braking torque 20% without resistance, 100% with optional resistance
- Integrated braking transistor up to 30kW
- RTU Modbus RS485 interface through RJ45
- 3 types of PWM modulation available
- Motor noise reduction function
- 2/3 wire wiring
- 8 Multifunction inputs
- 4 Multifunction outputs
- Programmable relay Output contacts
- Input and output phase loss control
- Auto-tuning of the modulation frequency according to the temperature
- Parameter protection with password
- 7 application masks available: pumps, fans, conveyors, cranes, compressors, lifting, HVAC
- 16 programmable fixed speeds
- 16 acceleration/deceleration ramps for each fixed speed
- 16 programmable cyclic speed sequences
- Pulse train frequency reference (speed)
- 4 acc/dec independent S-ramps
- Internal PLC functions with Ladder language (Timers, Counters, Comparators, ...)
- PID function that can be monitored on display
- Electromechanical brake control logic
- Input and output values that can be displayed
- Controlled motor stop with no power supply
- Energy-saving function
- Predictive maintenance functions on main components.

6 STRUCTURE

The whole AM16 series, regardless of the size, is characterised by an ergonomic and practical front panel where each interface provides an easy access for the user.

The keyboard, usually supplied and housed on the inverter, can be used in remote through an accessory extension cable (JN5-CB-...).

The control and power terminals are placed on the front area of the inverter, at the bottom under the keyboard, and can be accessed after the removal of the plastic safety guard.

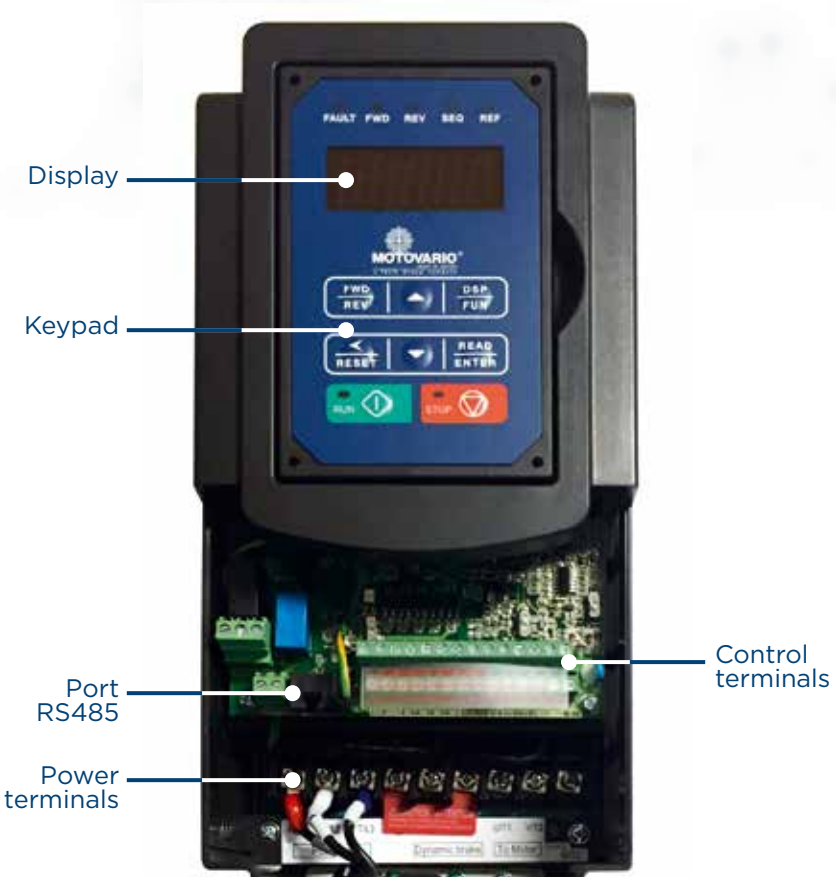

MOTOVARIO®
HEART OF MOTION
a TECO Group company

6 STRUCTURE

The product offers a wide range of optional devices dedicated to fieldbus network connections and connections with local data exchange units.

7 CONNECTIONS

The AM16 series offers the connection modes listed in the general diagram below:

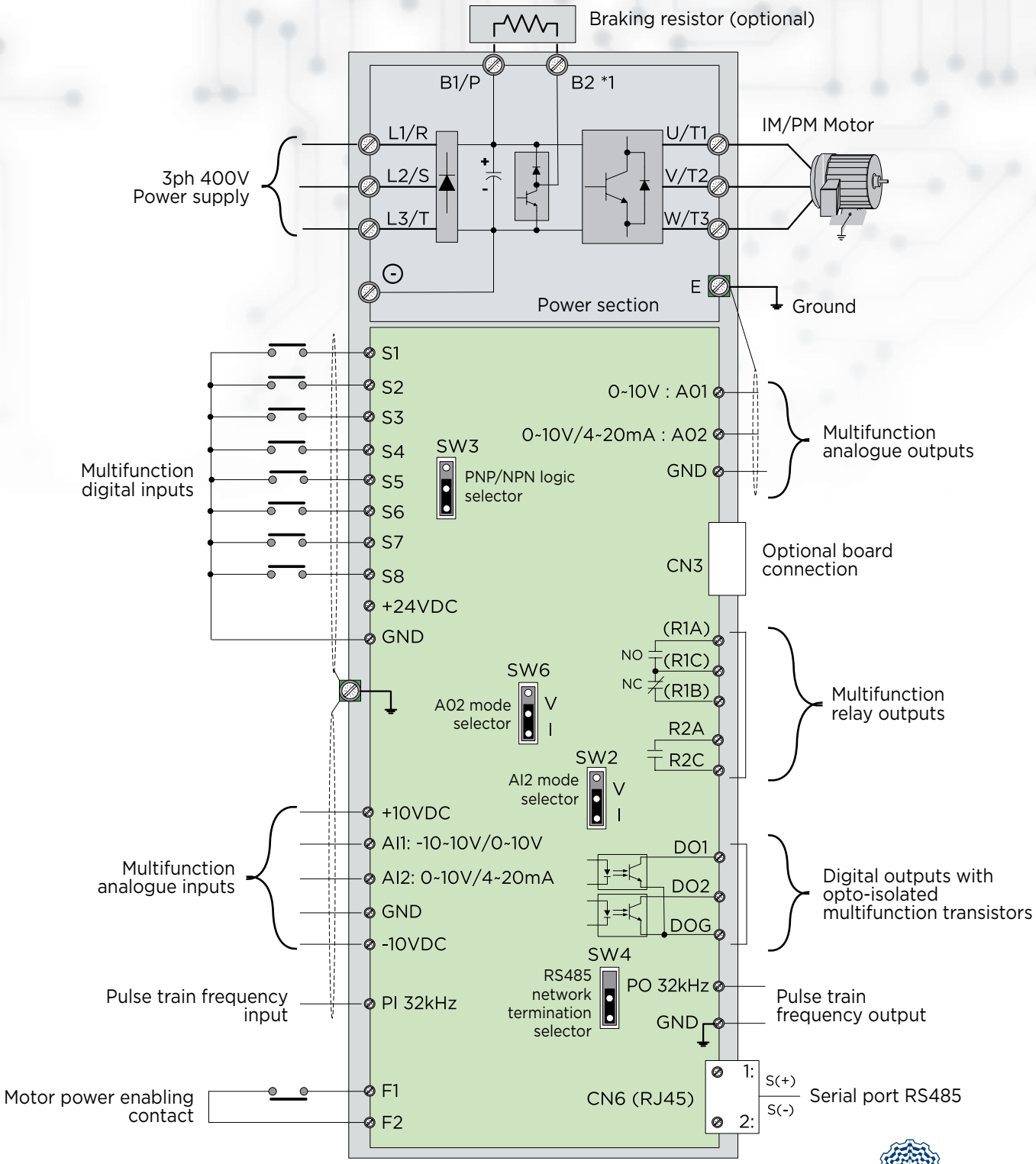

MOTOVARIO®
HEART OF MOTION
a TECO Group company

7 CONNECTIONS

Starting from the previous diagram, the power circuit section takes on different configurations according to the inverter size, as shown below:

400V: 0,75 ~ 1,5 KW

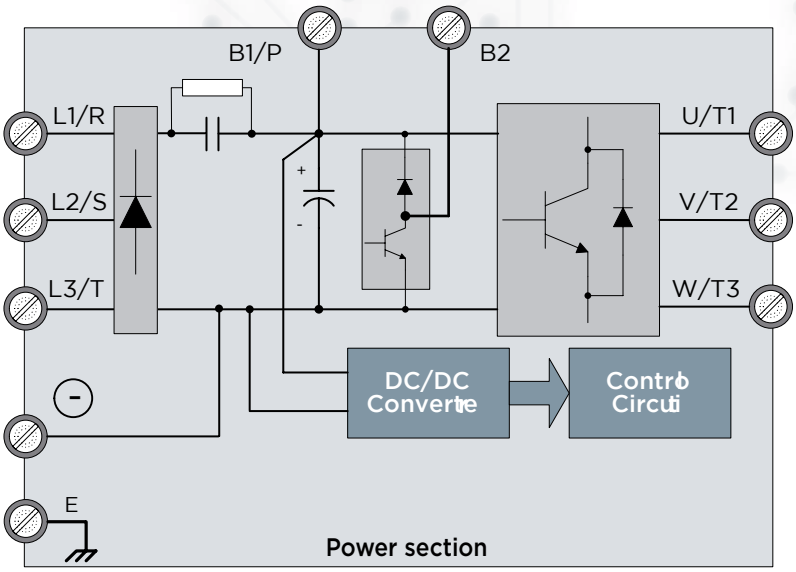

Models
AM16-340-0075-F-20
AM16-340-0150-F-20

400V: 2,2 ~ 30 KW

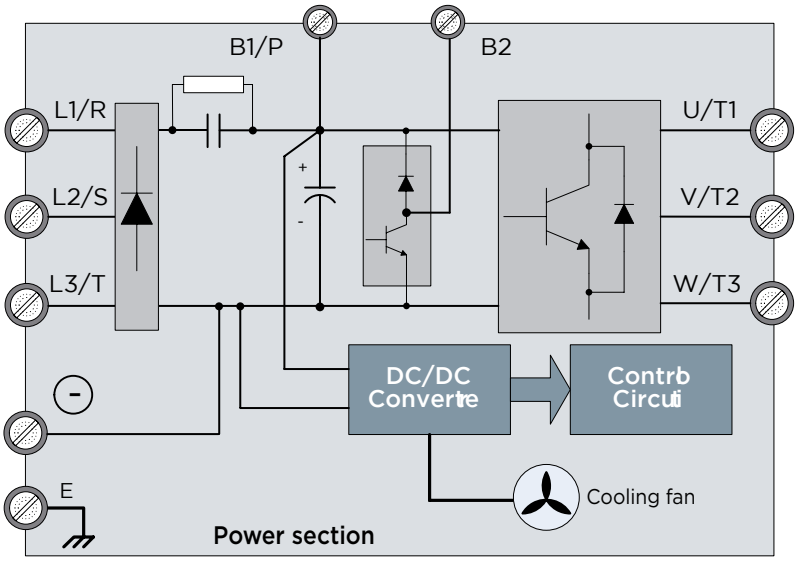

Models
AM16-340-0220-F-20
AM16-340-0400-F-20
AM16-340-0550-F-20
AM16-340-0750-F-20
AM16-340-1100-F-20
AM16-340-1500-F-20
AM16-340-1850-F-20
AM16-340-2200-F-20
AM16-340-3000-F-20

7 CONNECTIONS

400V: 37 ~ 55 KW

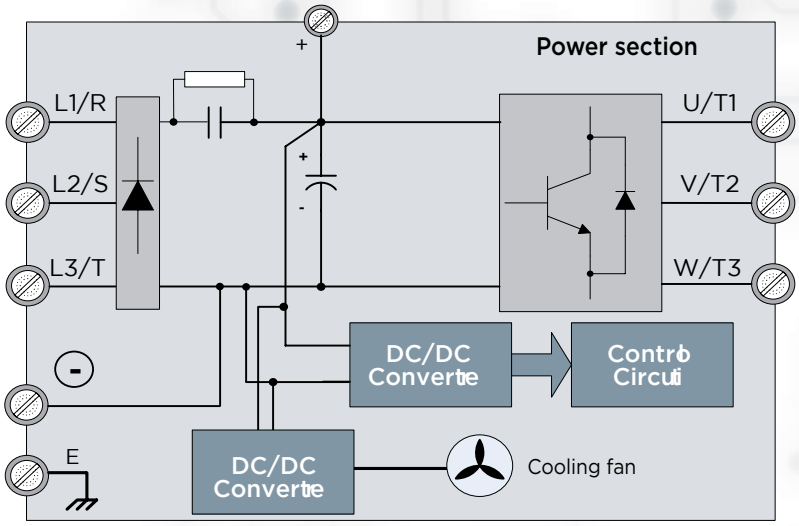

Models
AM16-340-3700-F-20
AM16-340-4500-F-20
AM16-340-5500-20

400V: 75 ~ 90 KW

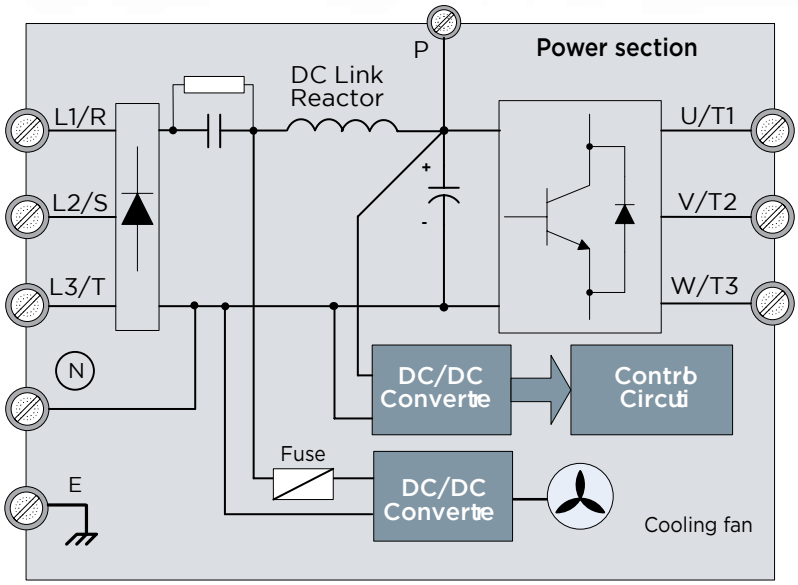

Models
AM16-340-7500-00
AM16-340-9000-00

8 GENERAL SPECIFICATIONS

Operating mode	LCD keypad with parameter copy function (optional 5" 7-segment LED keypad)	
Motor control	V/f, V/f+PG, SLV, SV,PMSLV, PMSV (open and closed loop scalar and vector control for induction motors IM; open and closed loop control for permanent magnet motors PM)	
Current overload	High dynamic applications (default)	150% for 60s - 200% for 2s
	Low dynamic applications	120% for 60s - 160% for 2s
Frequency range	0,00~599,00Hz	
Speed precision	SV mode (closed loop vector): +/- 0,1 %	
	SLV mode (open loop vector): +/- 0,5 %	
Adjustment frequency resolution	Up/Down digital inputs: 0,01Hz	
	Analogue input: 0,03Hz	
Frequency reference sources	Keyboard: adjustment through buttons ▲▼	
	0/2~10V analogue input	
	0/4~20mA analogue input	
	-10V....+10V analogue input	
	Multifunction digital inputs in Up/Down mode	
	Frequency input (pulse train)	
	Field bus/serial communication channels	
	Sum of two references	
Start/stop sources	Keyboard through RUN and STOP buttons	
	Multifunction digital inputs in 2 or 3 wire mode	
	Jog mode through digital inputs	
	Field bus/serial communication channels	
	Internal PLC functions	
Predefined V/f curves	15 selectable predefined curves and 2 curves defined by the user	
Carrier frequency	1~16kHz	
Control in acceleration/deceleration	2 linear independent acceleration ramps and 2 independent deceleration ramps	
	2 independent acceleration S-ramps and 2 independent deceleration S-ramps	
Multifunction digital inputs	8 PNP or NPN inputs (NPN default)	
	66 different settable functions	
	PNP/NPN logic selection through jumper (NPN default)	
Multifunction digital outputs	1 single-contact relay output + 1 SPDT relay output	
	2 open collector transistor outputs (48 Vdc)	
	58 different settable functions	
Multifunction analogue inputs	1 0~10V / -10 ~ +10V input	
	1 0~10V / 4 ~ 20mA input	
Multifunction analogue outputs	1 0~10V output	
	1 0~10V / 4 ~ 20mA output	

8 GENERAL SPECIFICATIONS

LED display	Display: parameter number/ parameter value/ frequency/ speed/ DC voltage/ output AC voltage/ output current/ PID feedback value/ inputs and outputs status/ heat sink temperature/ alarm in progress/ firmware version
Status LEDs	Run/stop/forward/reverse,bus DC charge level, etc. signalling.
Main features	Auto-tuning, torque control, standstill torque, control function with constant power, position control, torque automatic compensation, dynamic braking, DC braking, flying restart, PID control, speed control, speed automatic adjustment, PLC functions, motor enabling contact, 16 predefined speeds, energy-saving function, operation and status register, alarm reset, alarm log
Integrated protections	Motor and inverter overload (150% for 60sec or 200% for 2sec), overvoltage, undervoltage, output short-circuit, short-circuit to ground, stall prevention in transient mode and in standard operation, short power supply interruption compensation
Other integrated protections	Heat sink overtemperature, carrier frequency automatic adjustment according to the temperature, fault at output, rotation inversion not permitted, alarm self-reset, parameter block, motor overtemperature through PTC
Communication interfaces	On-board RS485 (Modbus RTU)
	Optional board: Profibus DP. Optional gateway: Profibus DP, DeviceNet, CANbus, Ethernet TCP/IP
Dynamic braking	Standard integrated braking unit up to 30kW, optional up to 55kW, not available for higher power ratings. External braking resistor always optional up to 55kW
Operating temperature	-10~50°C
Storage temperature	-20~70°C
Humidity	Lower than 95% RH (non-condensing)
Vibration resistance	1G (9,81m/s^2) up to 50 Hz
	In compliance with standard IEC 60068-2-6
Pollution degree	In compliance with standard IEC 60721-3-3 Class 3C2
Certifications	CE/UL/cUL/RCM
EMC Conformity	EN61800-3, first environment
	Category C1 using the grounding kit
LVD Conformity	EN 61800-5-1
UL electric safety	UL508C
Protection rating	IP20/Nema1 up to 55 kW; IP00 for 75 – 90 kW (IP20 with Nema1 kit)

9 TECHNICAL DATA

3PH 400V VERSION - 0,75÷5,5KW

	AM16-340-....-F20	0075	0150	0220	0400	0550
Motor side output (HIGH-DYNAMIC use)	**Recommended motor power (kW)**	**0,75**	**1,5**	**2,2**	**4**	**5,5**
	Output nominal power (kVA)	2,6	3,2	4,2	7	11,3
	Output nominal current (A)	3,4	4,2	5,5	9,2	14,8
	Overload current 150% x 60s (A)	5,1	6,3	8,25	13,8	22,2
	Overload current 200% x 2s (A)	6,8	8,4	11	18,4	29,6
Motor side output (LOW-DYNAMIC use)	Recommended motor power (kW)	1,5	2,2	4	5,5	7,5
	Output nominal power (kVA)	3,1	4,1	5,3	9,2	13,3
	Output nominal current (A)	4,1	5,4	6,9	12,1	17,5
	Overload current 120% x 60s (A)	4,92	6,48	8,28	14,52	21
Motor side output	Output voltage (V)	3x (0~V mains)				
	Output frequency (Hz)	0....599				
Mains side input	Mains nominal voltage (V)	3 x (323...528)				
	Mains nominal frequency (Hz)	50...60				
General	Weight (kg)	3,5			5,5	
	Size	1			2	
	Protection rating	IP20				
Options and accessories	Braking module	Integrated				
	Braking resistor	Optional				
	Line inductance	Optional				
	Motor inductance	Optional				
	EMI filter	Integrated				
	Control keyboard	Integrated				
	Communication interfaces	Integrated RTU Modbus - optional Profibus DP DeviceNet CANbus Ethernet TCP/IP				
	Feedback boards	Encoder: Incremental Line-Driver - Push-Pull - Sin/Cos Resolver				

9 TECHNICAL DATA

3PH 400V VERSION - 7,5÷22KW

	AM16-340-....-F-20	0750	1100	1500	1850	2200
Motor side output (HIGH-DYNAMIC use)	Recommended motor power (kW)	7,5	11	15	18,5	22
	Output nominal power (kVA)	13,7	18,3	23,6	29,7	34,3
	Output nominal current (A)	18	24	31	39	45
	Overload current 150% x 60s (A)	27	36	46,5	58,5	67,5
	Overload current 200% x 2s (A)	36	48	62	78	90
Motor side output (LOW-DYNAMIC use)	Recommended motor power (kW)	11	15	18,5	22	30
	Output nominal power (kVA)	17,5	23,6	29,0	33,5	44,2
	Output nominal current (A)	23	31	38	44	58
	Overload current 120% x 60s (A)	27,6	37,2	45,6	52,8	69,6
Motor side output	Output voltage (V)	3x (0~V mains)				
	Output frequency (Hz)	0....599				
Mains side input	Mains nominal voltage (V)	3 x (323...528)				
	Mains nominal frequency (Hz)	50...60				
General	Weight (kg)	8		12,5		
	Size	3		4		
	Protection rating	IP20				
Options and accessories	Braking module	Integrated				
	Braking resistor	Optional				
	Line inductance	Optional				
	Motor inductance	Optional				
	EMI filter	Integrated				
	Control keyboard	Integrated				
	Communication interfaces	Integrated RTU Modbus - optional Profibus DP DeviceNet CANbus Ethernet TCP/IP				
	Feedback boards	Encoder: Incremental Line-Driver - Push-Pull - Sin/Cos Resolver				

9 TECHNICAL DATA

3PH 400V VERSION - 30÷55KW

	AM16-340-....-.-00	3000	3700	4500	5500
Motor side output (HIGH-DYNAMIC use)	Recommended motor power (kW)	30	37	45	55
	Output nominal power (kVA)	45,7	57,2	69,3	89,9
	Output nominal current (A)	60	75	91	118
	Overload current 150% x 60s (A)	90	112,5	136,5	177
	Overload current 200% x 2s (A)	120	150	182	236
Motor side output (LOW-DYNAMIC use)	Recommended motor power (kW)	37	45	55	75
	Output nominal power (kVA)	55,6	67,1	78,5	111
	Output nominal current (A)	73	88	103	145
	Overload current 120% x 60s (A)	87,6	105,6	123,6	174
Motor side output	Output voltage (V)	3x (0~V mains)			
	Output frequency (Hz)	0....599			
Mains side input	Mains nominal voltage (V)	3 x (323...528)			
	Mains nominal frequency (Hz)	50...60			
General	Weight (kg)	32,5			35
	Size	5			
	Protection rating	IP20			
Options and accessories	Braking module	Integrated	Optional		
	Braking resistor	Optional			
	Line inductance	Optional			
	Motor inductance	Optional			
	EMI filter	Integrated			Optional
	Control keyboard	Integrated			
	Communication interfaces	Integrated RTU Modbus - optional Profibus DP DeviceNet CANbus Ethernet TCP/IP			
	Feedback boards	Encoder: Incremental Line-Driver - Push-Pull - Sin/Cos Resolver			

9 TECHNICAL DATA

3PH 400V VERSION - 75÷90KW

	AM16-340-....-20	7500	9000
Motor side output (HIGH-DYNAMIC use)	Recommended motor power (kW)	75	90
	Output nominal power (kVA)	114	137
	Output nominal current (A)	150	180
	Overload current 150% x 60s (A)	225	270
	Overload current 200% x 2s (A)	300	360
Motor side output (LOW-DYNAMIC use)	Recommended motor power (kW)	90	110
	Output nominal power (kVA)	128	159
	Output nominal current (A)	168	208
	Overload current 120% x 60s (A)	201,6	249,6
Motor side output	Output voltage (V)	3x (0-V mains)	
	Output frequency (Hz)	0....599	
Mains side input	Mains nominal voltage (V)	3 x (323...528)	
	Mains nominal frequency (Hz)	50...60	
General	Weight (kg)	46,7	
	Size	6	
	Protection rating	IP00	
Options and accessories	Braking module	-	
	Braking resistor	-	
	Line inductance	Optional	
	Motor inductance	Optional	
	EMI filter	Optional	
	Control keyboard	Integrated	
	Communication interfaces	Integrated RTU Modbus - optional Profibus DP DeviceNet CANbus Ethernet TCP/IP	
	Feedback boards	Encoder: Incremental Line-Driver - Push-Pull - Sin/Cos Resolver	

10 DIMENSIONS

MODELS WITH INTEGRATED EMI FILTER

Model	Dimensions (mm)									
	W	H	D	W1	H1	H2	t	d	Weight (kg)	Size
AM16-340-0075-F-20	130	306	150	118	203	215	5	M5	3,5	1
AM16-340-0150-F-20	130	306	150	118	203	215	5	M5	3,5	
AM16-340-0220-F-20	130	306	150	118	203	215	5	M5	3,5	
AM16-340-0400-F-20	140	400	177	122	267	279	7	M6	5,5	2
AM16-340-0550-F-20	140	400	177	122	267	279	7	M6	5,5	
AM16-340-0750-F-20	210	416,5	215	192	286	300	1,6	M6	8,0	3
AM16-340-1100-F-20	210	416,5	215	192	286	300	1,6	M6	8,0	
AM16-340-1500-F-20	265	500	225	245	340	360	1,6	M8	12,5	4
AM16-340-1850-F-20	265	500	225	245	340	360	1,6	M8	12,5	
AM16-340-2200-F-20	265	500	225	245	340	360	1,6	M8	12,5	
AM16-340-3000-F-20	286,5	679	252	220	505	525	3,3	M8	32,5	5
AM16-340-3700-F-20	286,5	679	252	220	505	525	3,3	M8	32,5	
AM16-340-4500-F-20	286,5	679	252	220	505	525	3,3	M8	32,5	

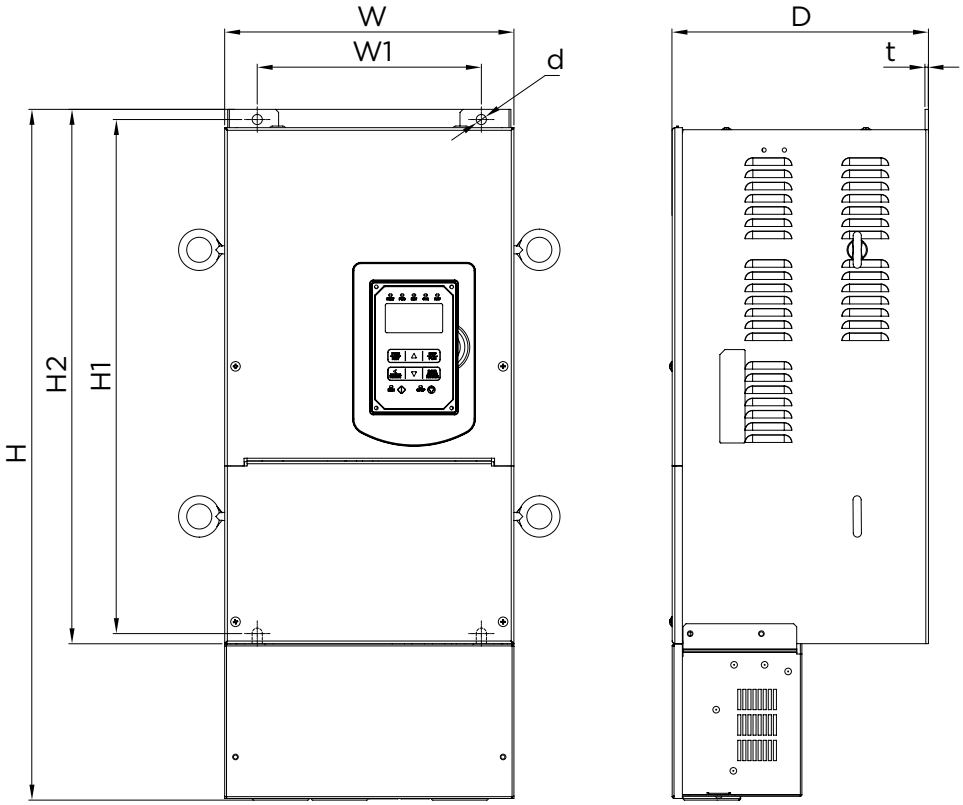

10 DIMENSIONS

MODELS WITHOUT INTEGRATED EMI FILTER

Model	Dimensions (mm)								
	W	H	D	W1	H1	t	d	Weight (kg)	Size
AM16-340-5500-20	286,5	525	252	220	505	3,3	M8	35	5
AM16-340-7500-00	344	580	300	250	560	1,6	M8	46,7	6
AM16-340-9000-00	344	580	300	250	560	1,6	M8	46,7	

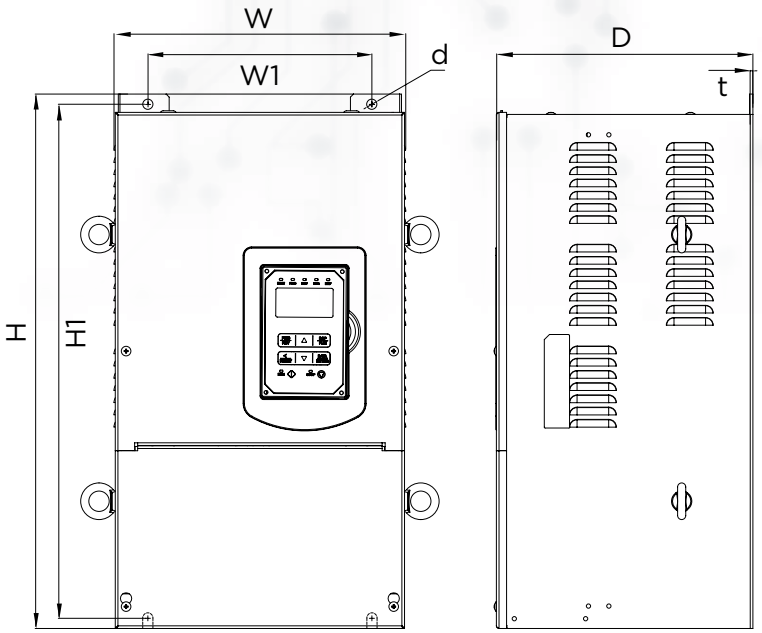

11 OPTIONS AND ACCESSORIES

The AM16 inverter can be equipped with a wide range of optional components and accessories listed in the table below:

CABLES

Type	Description
JN5-CM-USB	RJ45-USB cable for programming via PC - 1,8m
JN5-CM-USB-3	RJ45-USB cable for programming via PC - 3m
JN5-CB-01M	Extension cable for keypad - 1m
JN5-CB-02M	Extension cable for keypad - 2m
JN5-CB-03M	Extension cable for keypad - 3m
JN5-CB-05M	Extension cable for keypad - 5m

KEYPADS

Type	Description
JN5-OP-A01	LED keypad
JN5-OP-A02	LCD keypad
JN5-OP-A03	Blind faceplate
JN5-CU	Parameter Copy Device with JN5-CB-02M cable

INSTALLATION KIT

Type	Description
JN5-CR-A01	Protection cover for size_1
JN5-CR-A02	Protection cover for size_2
JN5-CR-A04	Protection cover for size_4
JN5-NK-A06	NEMA1 kit for size_6

COMMUNICATION MODULES

Type	Description
JN5-CM-PBUS	Profibus DP board
JN5-CM-PDP	Profibus DP gateway
JN5-CM-TCPIP	Ethernet TCP/IP Gateway
JN5-CM-DNET	DeviceNet Gateway
JN5-CM-CAN	CANbus Gateway

11 OPTIONS AND ACCESSORIES

ENCODER BOARDS

Type	Description
JN5-PG-L	Line-driver incremental encoder feedback board
JN5-PG-O	Push-pull incremental encoder feedback board
JN5-PG-PM	Line-driver incremental encoder feedback board for PM motors
JN5-PG-PMR	Tamagawa resolver feedback board for PM motors
JN5-PG-PMS	Sin/cos Heidenhain ERN1387 incremental encoder feedback board for PM motors

BRAKING RESISTORS

Inverter type	Inverter power (kW)	Resistor type	Description
AM16-340-0075-F-20	0,75 (3ph400V)	JTTLKEB-150W750	750 Ω / 150W / IP20
AM16-340-0150-F-20	1,5 (3ph400V)	JTTLKEB-150W400	400 Ω / 150W / IP20
AM16-340-0220-F-20	2,2 (3ph400V)	JTTLKEB-300W250	250 Ω / 300W / IP20
AM16-340-0400-F-20	4,0 (3ph400V)	JTTLKEB-400W150	150 Ω / 400W / IP20
AM16-340-0550-F-20	5,5 (3ph400V)	JTTLKEB-600W130	130 Ω / 600W / IP20
AM16-340-0750-F-20	7,5 (3ph400V)	JTTLKEB-800W100	100 Ω / 800W / IP20
AM16-340-1100-F-20	11 (3ph400V)	JTTLKEB-1600W50	50 Ω / 1600W / IP20
AM16-340-1500-F-20	15 (3ph400V)	JTTLKEB-1500W40	40 Ω / 1500W / IP20
AM16-340-1850-F-20	18,5 (3ph400V)	JNBR-4R8KW32	32 Ω / 4800W / IP00
AM16-340-2200-F-20	22 (3ph400V)	JNBR-4R8KW27R2	27,2 Ω / 4800W / IP00
AM16-340-3000-F-20	30 (3ph400V)	JNBR-6KW20	20 Ω / 6000W / IP00
AM16-340-3700-F-20	37 (3ph400V)	JNBR-4R8KW32[1]	32 Ω / 4800W / IP00
AM16-340-4500-F-20	45 (3ph400V)	JNBR-4R8KW27R2[1]	27,2 Ω / 4800W / IP00
AM16-340-5500-20	55 (3ph400V)	JNBR-6KW20[1]	20 Ω / 6000W / IP00
AM16-340-7500-00	75 (3ph400V)	-	-
AM16-340-9000-00	90 (3ph400V)	-	-

[1] To be matched to the braking unit JNTB-430

BRAKING UNIT

Inverter type	Braking unit type	Description
AM16-340-3700-F-20	JNTB-430	380-480V 15A/40A
AM16-340-4500-F-20	JNTB-430	380-480V 15A/40A
AM16-340-5500-20	JNTB-430	380-480V 15A/40A

EMI FILTER

Inverter type	Filter type	Description
AM16-340-5500-20	FN3258-180-40	180A
AM16-340-7500-00	FS32126-165-99	165A
AM16-340-9000-00	FS32126-328-99	328A

11 OPTIONS AND ACCESSORIES

LINE INDUCTANCE

Inverter type	Inverter power (kW)	Inductance type (mains)	Description
AM16-340-0075-F-20	0,75 (3ph400V)	CNW-905/6	4,9 mH / 5A / 2%
AM16-340-0150-F-20	1,5 (3ph400V)	CNW-905/6	3,7 mH / 6,5A / 2%
AM16-340-0220-F-20	2,2 (3ph400V)	CNW-905/10	2,9 mH / 8,5A / 2%
AM16-340-0400-F-20	4,0 (3ph400V)	CNW-905/12	1,7 mH / 15A / 2%
AM16-340-0550-F-20	5,5 (3ph400V)	CNW-905/25	1,2 mH / 25A / 2%
AM16-340-0750-F-20	7,5 (3ph400V)	CNW-905/25	0,88 mH / 30A / 2%
AM16-340-1100-F-20	11 (3ph400V)	CNW-905/36	0,65 mH / 40A / 2%
AM16-340-1500-F-20	15 (3ph400V)	CNW-905/50	0,53 mH / 50A / 2%
AM16-340-1850-F-20	18,5 (3ph400V)	CNW-905/50	0,46 mH / 55A / 2%
AM16-340-2200-F-20	22 (3ph400V)	CNW-905/70	0,35 mH / 70A / 2%
AM16-340-3000-F-20	30 (3ph400V)	CNW-905/90	0,28 mH / 90A / 2%
AM16-340-3700-F-20	37 (3ph400V)	CNW-905/110	0,23 mH / 110A / 2%
AM16-340-4500-F-20	45 (3ph400V)	CNW-905/125	0,2 mH / 130A / 2%
AM16-340-5500-20	55 (3ph400V)	CNW-905/160	0,14 mH / 180A / 2%
AM16-340-7500-00	75 (3ph400V)	CNW-905/200	0,12 mH / 210A / 2%
AM16-340-9000-00	90 (3ph400V)	CNW-905/250	0,1 mH / 260A / 2%

MOTOR INDUCTANCE

Inverter type	Inverter power (kW)	Inductance type (motor)	Description
AM16-340-0075-F-20	0,75 (3ph400V)	CNW-854/8	-
AM16-340-0150-F-20	1,5 (3ph400V)	CNW-854/8	-
AM16-340-0220-F-20	2,2 (3ph400V)	CNW-854/8	-
AM16-340-0400-F-20	4,0 (3ph400V)	CNW-854/16	-
AM16-340-0550-F-20	5,5 (3ph400V)	CNW-854/24	-
AM16-340-0750-F-20	7,5 (3ph400V)	CNW-854/24	-
AM16-340-1100-F-20	11 (3ph400V)	CNW-854/37	-
AM16-340-1500-F-20	15 (3ph400V)	CNW-854/48	-
AM16-340-1850-F-20	18,5 (3ph400V)	CNW-854/48	-
AM16-340-2200-F-20	22 (3ph400V)	CNW-854/60	-
AM16-340-3000-F-20	30 (3ph400V)	CNW-854/90	-
AM16-340-3700-F-20	37 (3ph400V)	CNW-854/90	-
AM16-340-4500-F-20	45 (3ph400V)	CNW-854/115	-
AM16-340-5500-20	55 (3ph400V)	CNW-854/150	-
AM16-340-7500-00	75 (3ph400V)	CNW-854/200	-
AM16-340-9000-00	90 (3ph400V)	CNW-854/250	-

NOTES

MOTOVARIO®
HEART OF MOTION
a TECO Group company

NOTES

AM16 / EN / 2017 / REV.0

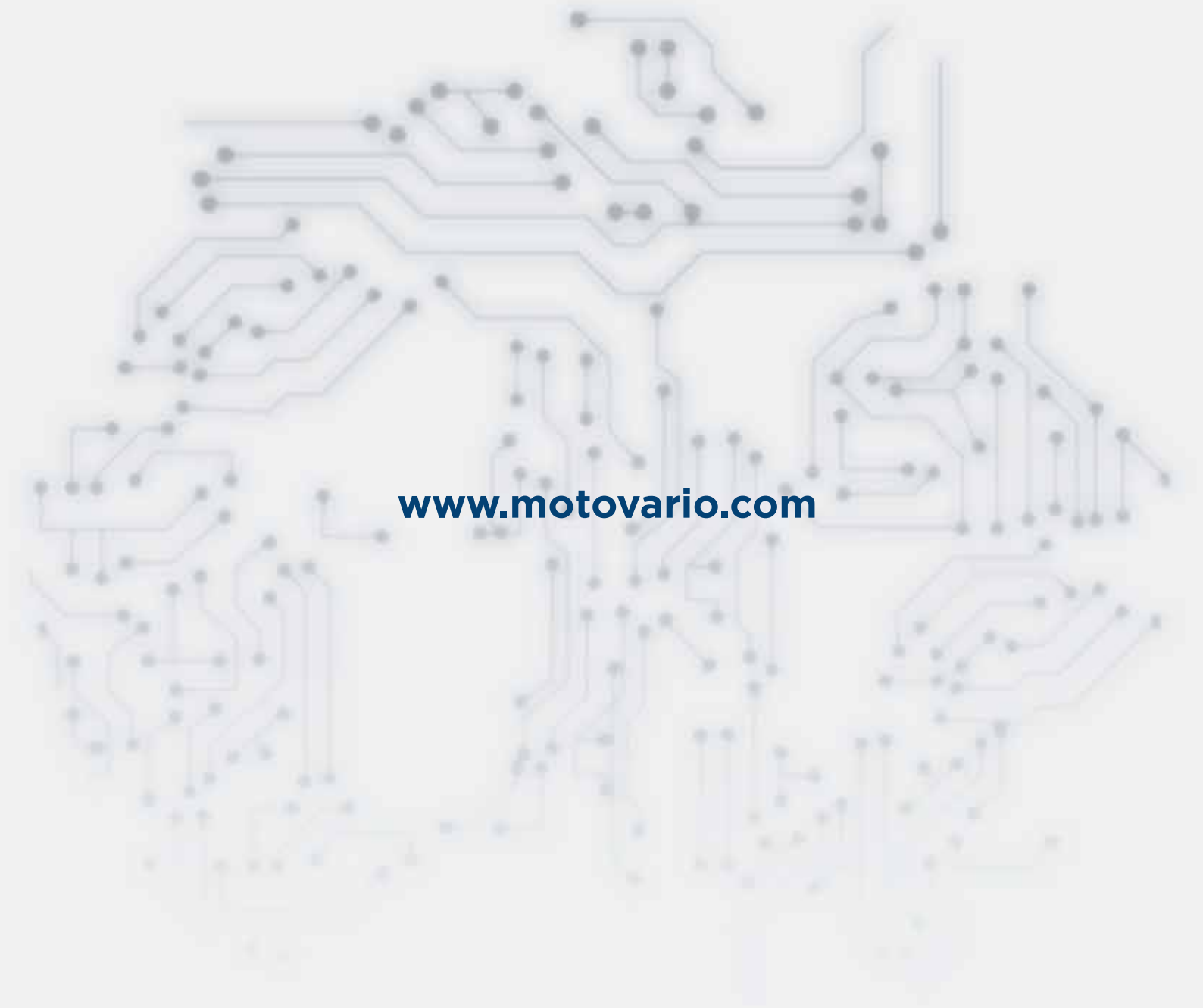

www.motovario.com